Augenti®
LIGHTING

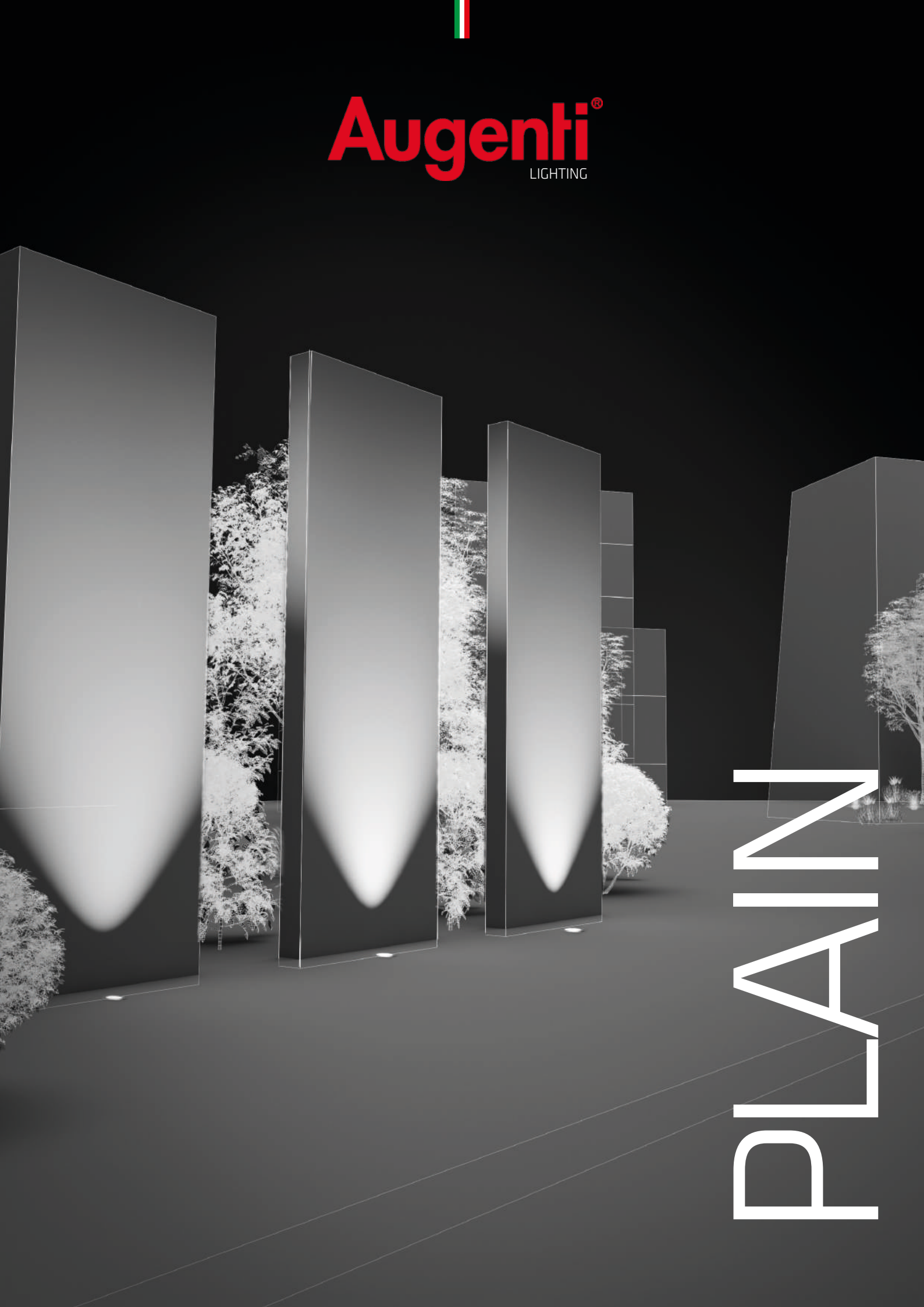

PLAIN

THE DETAILS MAKE THE DIFFERENCE

PLAIN collection

PLAIN collection

Abbiamo progettato **Plain** partendo da dei punti chiave imprescindibili: **installazione rapida e sicura, elevata dissipazione, protezione anti-condensa, manutenzione semplice e veloce.** Gli accorgimenti tecnici del prodotto permettono l'installazione e l'utilizzo di **Plain** in molteplici progetti ed in totale sicurezza, garantendone praticità, adattabilità e **durata nel tempo grazie alla struttura ed ai materiali utilizzati.**
Inoltre, la miscelazione e la pulizia dei fasci luminosi, ottenuti attraverso **un'accurata scelta delle ottiche**, conferiscono a **Plain** gli elementi definitivi per renderlo un prodotto **largamente collocabile ed altamente performante.**

We have designed **Plain** starting from essential key-points: **quick and safe installation, high dissipation, anti-condensation protection, easy and fast maintenance.**
The technical expedients of the fixture allow the installation and the usage of **Plain** in different projects and in total security, granting suitability, **adaptability and long lasting** thanks to the structure and the used materials. Moreover, the mixing and the cleaning of the lighting beams, **obtained through a careful choice of the optics,** give to **Plain** the definitive elements to be a **product widely placeable and highly performing.**

Nous avons conçu **Plain** en partant de quelques points clés essentiels : **installation rapide et sûr, dissipation élevée, protection anti-condensation, maintenance rapide et facile.** Les caractéristiques techniques du produit permettent l'installation et l'utilisation de **Plain** dans de multiples projets et en toute sécurité, garantissant sa praticité, adaptabilité et **durabilité grâce à la structure et aux matériaux utilisés.**
De plus, le mélange et le nettoyage des faisceaux lumineux, **obtenus grâce à des choix d'optique**, donnez à **Plain** les éléments définitifs pour en faire un produit **largement placable et hautement performant.**

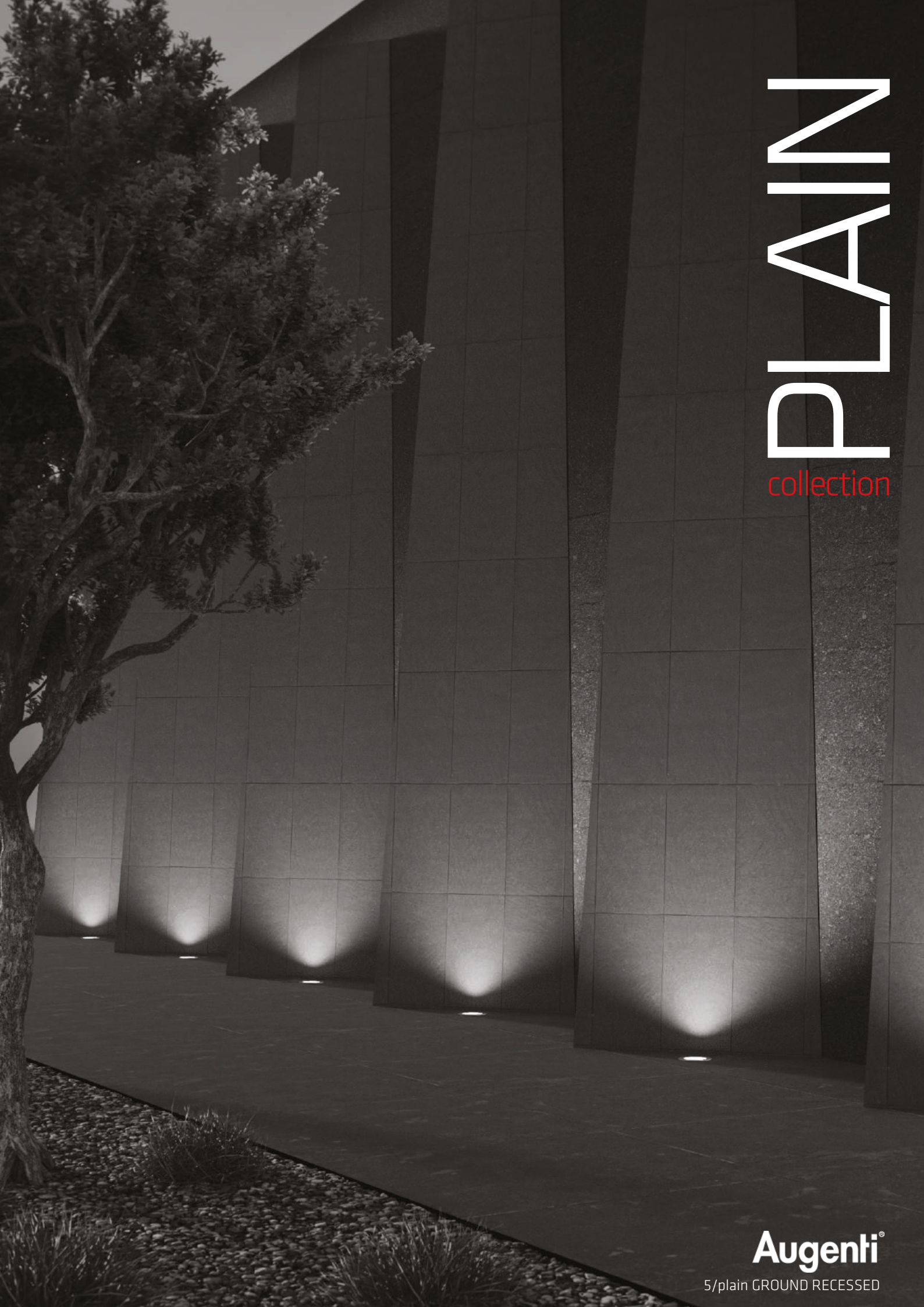

PLAIN
collection

Augenti®

5/plain GROUND RECESSED

PLAIN

collection

AcquaStop è una speciale lavorazione all'interno del pressacavo che, attraverso varie fasi di resinatura, crea una vera e propria barriera, sigillando la lampada in maniera definitiva e prevenendo quindi la formazione di condensa all'interno di essa.

AcquaStop is a special process inside the cable gland which, through different phases of resination, creates a real barrier, sealing the fixture in a definitve way and preventing the development of condensation inside.

Acquastop est un procédé spécifique à l'intérieur du presse-étoupe, qui grâce à différentes mises en oeuvres de couches d'étanchéités, crée une barrière définitive à la formation de condensation à l'intérieur du luminaire.

acquaSTOP

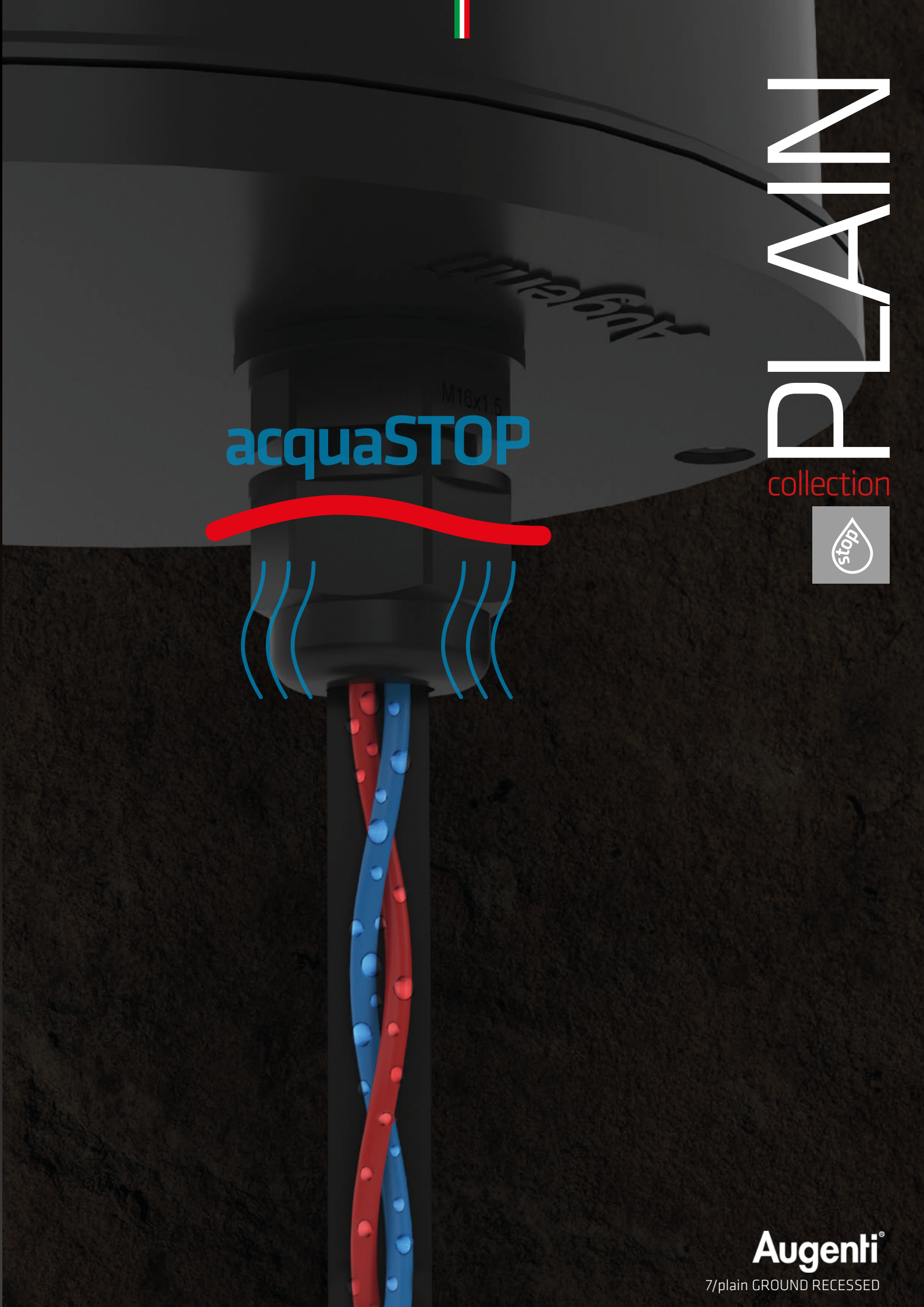

PLAIN

collection

Augenti®

7/plain GROUND RECESSED

PLAIN

anello in **acciaio inox 316L**

stainless steel ring 316L

corpo **illuminante**

lighting body

carter in tecnopolimero per **elettronica**

technopolymer casing for electronic parts

controcassa

outer casing

Carter per elettronica separato dal corpo illuminante
Carter for electronics separated from the lighting body

• MIGLIOR ISOLAMENTO TERMICO DELL'ELETTRONICA
BETTER THERMAL INSULATION OF ELECTRONICS

• FACILE MANUTENZIONE
EASY MAINTENANCE

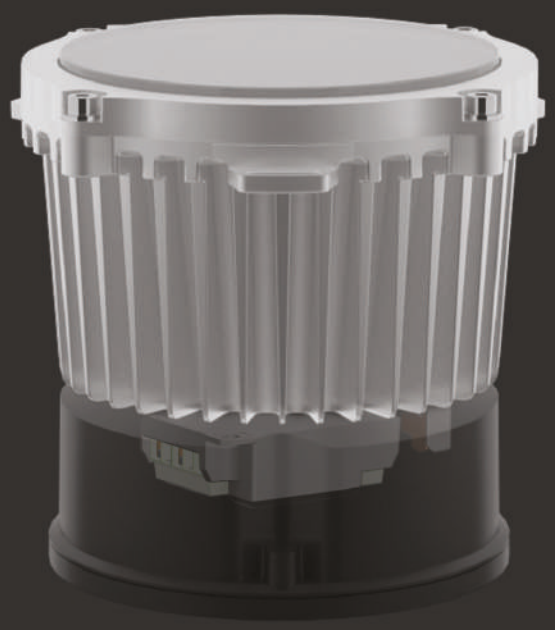

• INSTALLAZIONE E MANUTENZIONE SENZA APERTURA DEL CORPO ILLUMINANTE
INSTALLATION AND MAINTENANCE WITHOUT OPENING LIGHTING BODY

• VITI INOX CON DISPOSITIVI ANTI CORROSIONE
STAINLESS STEEL SCREWS WITH ANTI-CORROSION DEVICES

PLAIN

BEAM NB MB WB SW AB

Incasso terra / Ground recessed / Encastré au sol

Augenti®

11/plain GROUND RECESSED

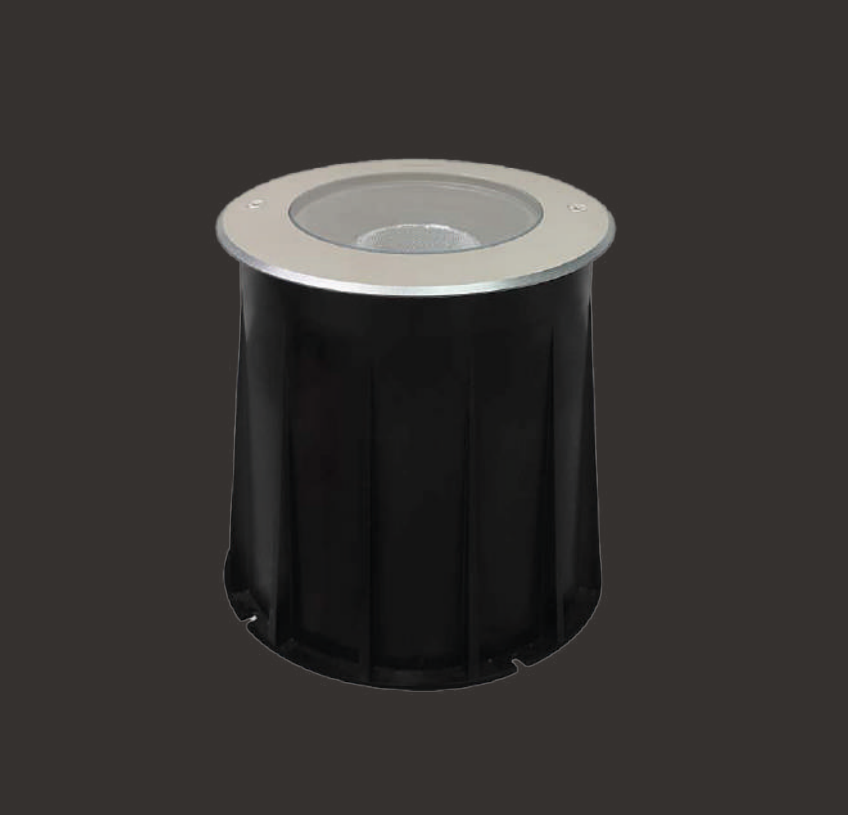

Fixture Specifications

Protection . IP 67 - IK 10

Body . Die Casting Aluminium

Carter/Box . Tecnopolymer

Frame . Steel AISI 316L

Screen . Extra-clear transparent Glass 15mm

Seals . Silicon rubber

Screws . Stainless steel A2 with anti-corrosion devices

Finishes

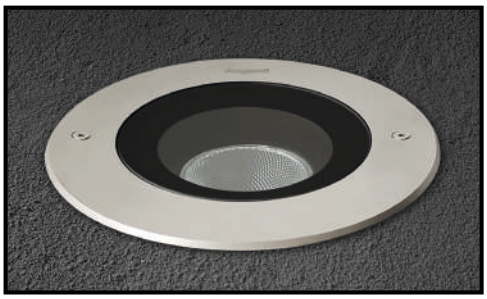

STEEL FRAME

Technical Data

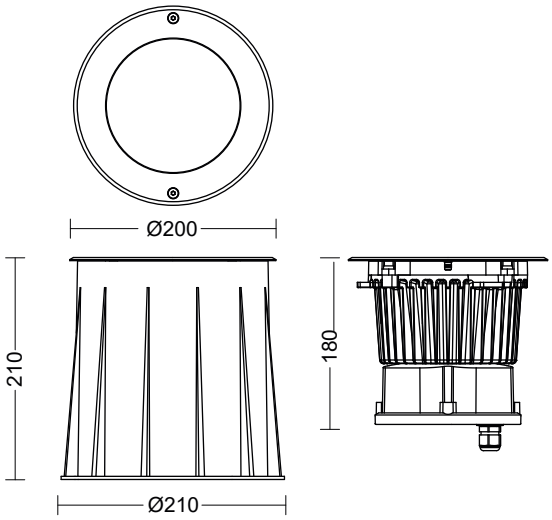

NB FASCIO STRETTO 15° - NARROW BEAM 15°

MB FASCIO MEDIO 25° - MEDIUM BEAM 25°

WB FASCIO LARGO 36° - WIDE BEAM 36°

SW FASCIO SUPER LARGO 60° - SUPER WIDE BEAM 60°

AB ASIMMETRICO - ASYMMETRIC

2700K - 3000K - 4000K

DRIVER INCORPORATO - BUILT-IN DRIVER

Quote espresse in millimetri "mm"
Share expressed in millimeters "mm"

Sizes . H210 x Ø210 x Ø ring 200

Specifications

IP67 IK10 2000 kg

website-link

Incasso terra / Ground recessed / Encastré au sol

PLAIN

led WHITE

LED SYSTEM WITH BUILT-IN DRIVER - ON/OFF

code	beam	class	W	source	fixture	RCT LED	CRI
3200R/HC50NB99	NB Spot/15°	II	20W	2565 lm	1805 lm	2700K	80
3200R/WC50NB99	NB Spot/15°	II	20W	2700 lm	1900 lm	3000K	80
3200R/NC50NB99	NB Spot/15°	II	20W	2850 lm	2000 lm	4000K	80
3200R/HC50MB99	MB Flood/25°	II	20W	2565 lm	1843 lm	2700K	80
3200R/WC50MB99	MB Flood/25°	II	20W	2700 lm	1940 lm	3000K	80
3200R/NC50MB99	MB Flood/25°	II	20W	2850 lm	2040 lm	4000K	80
3200R/HC50WB99	WB Wide Flood/36°	II	20W	2565 lm	1900 lm	2700K	80
3200R/WC50WB99	WB Wide Flood/36°	II	20W	2700 lm	2000 lm	3000K	80
3200R/NC50WB99	WB Wide Flood/36°	II	20W	2850 lm	2100 lm	4000K	80
3200R/HC50SW99	SW Super Wide 60°	II	20W	2565 lm	1900 lm	2700K	80
3200R/WC50SW99	SW Super Wide 60°	II	20W	2700 lm	2000 lm	3000K	80
3200R/NC50SW99	SW Super Wide 60°	II	20W	2850 lm	2100 lm	4000K	80
3200R/HC50AB99	AB Asymmetric	II	20W	2565 lm	1757 lm	2700K	80
3200R/WC50AB99	AB Asymmetric	II	20W	2700 lm	1850 lm	3000K	80
3200R/NC50AB99	AB Asymmetric	II	20W	2850 lm	1950 lm	4000K	80

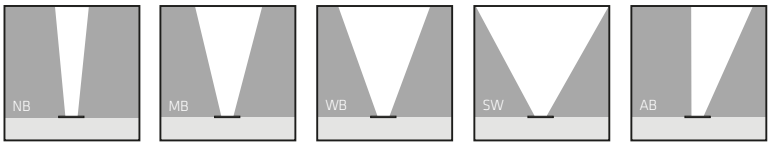

Accessories

informazioni sugli accessori sul nostro sito web
information about accessories on our website

CONNECTOR
IP68 2 ways

CONNECTOR
IP68 3 ways

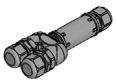

Specifications

IP67 IK10 2000 kg

PLAIN

led WHITE

LED SYSTEM WITH BUILT-IN DRIVER - DALI-2 INTEGRATED

code	beam	class	W	source	fixture	RCT LED	CRI
3200R/HD50NB99	NB Spot/15°	II	20W	2565 lm	1805 lm	2700K	80
3200R/WD50NB99	NB Spot/15°	II	20W	2700 lm	1900 lm	3000K	80
3200R/ND50NB99	NB Spot/15°	II	20W	2850 lm	2000 lm	4000K	80
3200R/HD50MB99	MB Flood/25°	II	20W	2565 lm	1843 lm	2700K	80
3200R/WD50MB99	MB Flood/25°	II	20W	2700 lm	1940 lm	3000K	80
3200R/ND50MB99	MB Flood/25°	II	20W	2850 lm	2040 lm	4000K	80
3200R/HD50WB99	WB Wide Flood/36°	II	20W	2565 lm	1900 lm	2700K	80
3200R/WD50WB99	WB Wide Flood/36°	II	20W	2700 lm	2000 lm	3000K	80
3200R/ND50WB99	WB Wide Flood/36°	II	20W	2850 lm	2100 lm	4000K	80
3200R/HD50SW99	SW Super Wide 60°	II	20W	2565 lm	1900 lm	2700K	80
3200R/WD50SW99	SW Super Wide 60°	II	20W	2700 lm	2000 lm	3000K	80
3200R/ND50SW99	SW Super Wide 60°	II	20W	2850 lm	2100 lm	4000K	80
3200R/HD50AB99	AB Asymmetric	II	20W	2565 lm	1757 lm	2700K	80
3200R/WD50AB99	AB Asymmetric	II	20W	2700 lm	1850 lm	3000K	80
3200R/ND50AB99	AB Asymmetric	II	20W	2850 lm	1950 lm	4000K	80

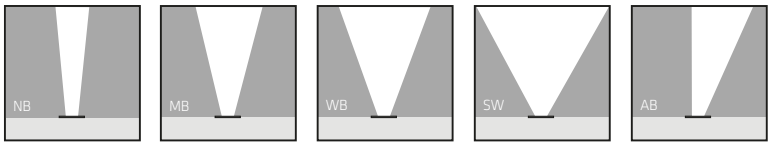

Accessories

informazioni sugli accessori sul nostro sito web
information about accessories on our website

CONNECTOR
IP68 2 ways

CONNECTOR
IP68 3 ways

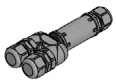

Specifications

IP67 IK10 2000 kg DALI READY TO CONNECT

PLAIN

collection

Augenti®

15/plain GROUND RECESSED

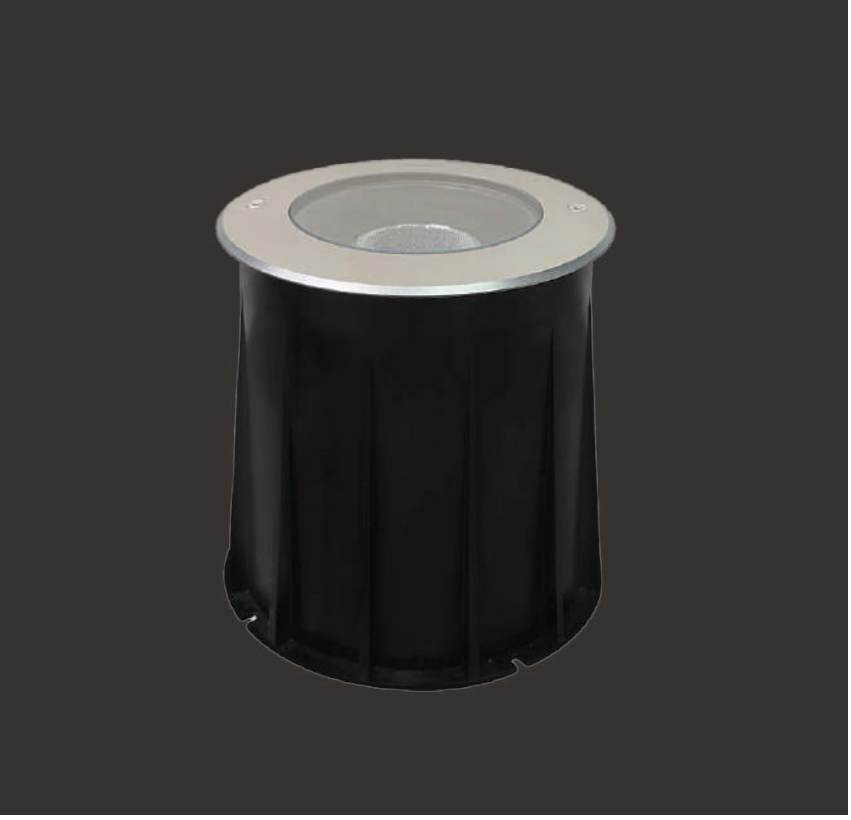

Fixture Specifications

Protection . IP 67 - IK 10

Body . Die Casting Aluminium

Carter/Box . Tecnopolymer

Frame . Steel AISI 316L

Screen . Extra-clear transparent Glass 15mm

Seals . Silicon rubber

Screws . Stainless steel A2 with anti-corrosion devices

Finishes

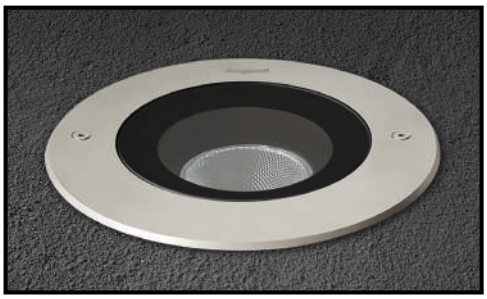

STEEL FRAME

Technical Data

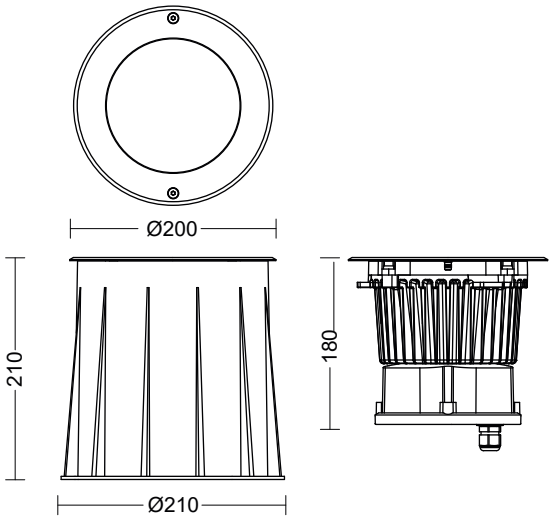

NB FASCIO STRETTO 16° - NARROW BEAM 16°

MB FASCIO MEDIO 33° - MEDIUM BEAM 33°

WB FASCIO LARGO 54° - WIDE BEAM 54°

OB FASCIO OVALE 25°x60° - OVAL BEAM 25°x60°

2700K - 3000K - 4000K

DRIVER INCORPORATO - BUILT-IN DRIVER

Quote espresse in millimetri "mm"
Share expressed in millimeters "mm"

Sizes . H210 x Ø210 x Ø ring 200

Specifications

IP67 IK10 2000 kg

website-link

Incasso terra / Ground recessed / Encastré au sol

PLAIN **ADJUSTABLE**

led WHITE

LED SYSTEM WITH BUILT-IN DRIVER - ON/OFF

code	beam	class	W	source	fixture	RCT LED	CRI
3201R/HC45NB99	NB Spot/16°	II	18W	2400 lm	1800 lm	2700K	80
3201R/WC45NB99	NB Spot/16°	II	18W	2400 lm	1800 lm	3000K	80
3201R/NC45NB99	NB Spot/16°	II	18W	2550 lm	1900 lm	4000K	80
3201R/HC45MB99	MB Flood/33°	II	18W	2400 lm	1800 lm	2700K	80
3201R/WC45MB99	MB Flood/33°	II	18W	2400 lm	1800 lm	3000K	80
3201R/NC45MB99	MB Flood/33°	II	18W	2550 lm	1900 lm	4000K	80
3201R/HC45WB99	WB Wide Flood/54°	II	18W	2400 lm	1700 lm	2700K	80
3201R/WC45WB99	WB Wide Flood/54°	II	18W	2400 lm	1700 lm	3000K	80
3201R/NC45WB99	WB Wide Flood/54°	II	18W	2550 lm	1800 lm	4000K	80
3201R/HC45OB99	OB Oval 25°x60°	II	18W	2400 lm	1700 lm	2700K	80
3201R/WC45OB99	OB Oval 25°x60°	II	18W	2400 lm	1700 lm	3000K	80
3201R/NC45OB99	OB Oval 25°x60°	II	18W	2550 lm	1800 lm	4000K	80

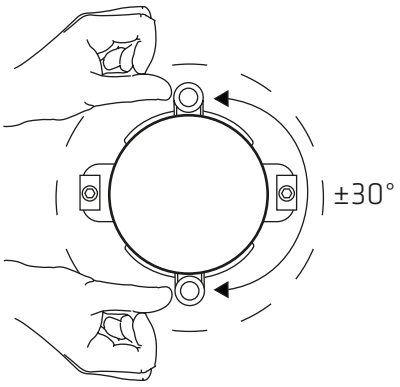

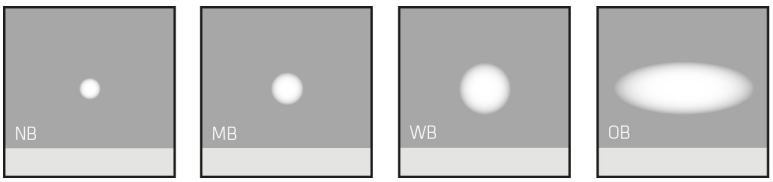

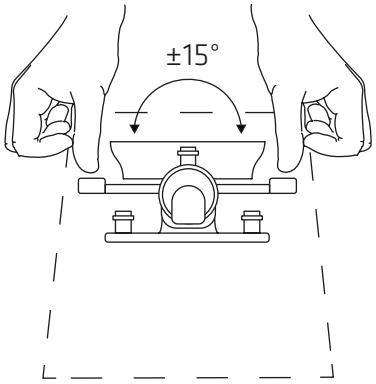

Accessories

informazioni sugli accessori sul nostro sito web
information about accessories on our website

CONNECTOR
IP68 2 ways

CONNECTOR
IP68 3 ways

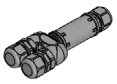

Specifications

IP67 IK10 2000 kg

PLAIN **ADJUSTABLE**

led WHITE

LED SYSTEM WITH BUILT-IN DRIVER - DALI-2 INTEGRATED

code	beam	class	W	source	fixture	RCT LED	CRI
3201R/HD45NB99	NB Spot/16°	II	18W	2400 lm	1800 lm	2700K	80
3201R/WD45NB99	NB Spot/16°	II	18W	2400 lm	1800 lm	3000K	80
3201R/ND45NB99	NB Spot/16°	II	18W	2550 lm	1900 lm	4000K	80
3201R/HD45MB99	MB Flood/33°	II	18W	2400 lm	1800 lm	2700K	80
3201R/WD45MB99	MB Flood/33°	II	18W	2400 lm	1800 lm	3000K	80
3201R/ND45MB99	MB Flood/33°	II	18W	2550 lm	1900 lm	4000K	80
3201R/HD45WB99	WB Wide Flood/54°	II	18W	2400 lm	1700 lm	2700K	80
3201R/WD45WB99	WB Wide Flood/54°	II	18W	2400 lm	1700 lm	3000K	80
3201R/ND45WB99	WB Wide Flood/54°	II	18W	2550 lm	1800 lm	4000K	80
3201R/HD45OB99	OB Oval 25°x60°	II	18W	2400 lm	1700 lm	2700K	80
3201R/WD45OB99	OB Oval 25°x60°	II	18W	2400 lm	1700 lm	3000K	80
3201R/ND45OB99	OB Oval 25°x60°	II	18W	2550 lm	1800 lm	4000K	80

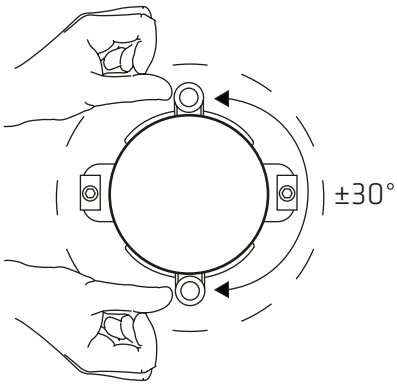

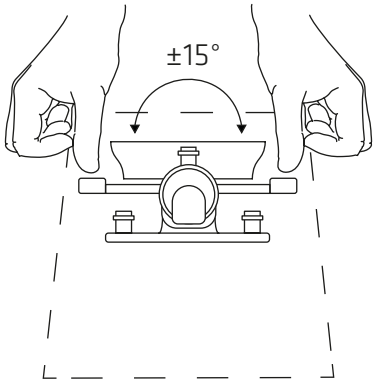

Accessories

informazioni sugli accessori sul nostro sito web
information about accessories on our website

CONNECTOR
IP68 2 ways

CONNECTOR
IP68 3 ways

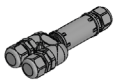

Specifications

IP67 IK10 2000 kg DALI READY TO CONNECT

Incasso terra / Ground recessed / Encastré au sol

PLAIN
collection

Augenti®

19/plain GROUND RECESSED

PLAIN

ADJUSTABLE

BEAM **NB** **MB** **WB** **OB**

Incasso terra / Ground recessed / Encastré au sol

Augenti®

21/plain GROUND RECESSED

PLAIN
GOOD
INSTALLATION
BY Augenti® LIGHTING

Augenti®
LIGHTING

AUGENTI LIGHTING S.R.L. UNIPERSONALE

Via Francesco Lana, 31 - 25065 Lumezzane (BS) Italy - tel: (+39) 030 7282524 - fax: (+39) 030 7281879
info@augentilighting.it - www.augentilighting.it